Charging with USB Cable

1 Close the LCD monitor to turn off the camcorder and disconnect the AC adapter as well as battery pack from the camcorder.

2 Turn on the computer and connect the USB cable to the camcorder.

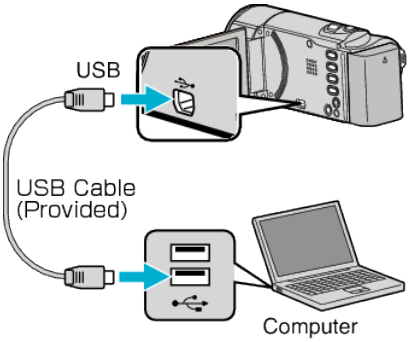

- Do not attach the battery pack before connecting the USB cable.

3 Attach the battery pack.

- The charging lamp blinks when charging is in progress.
  It goes out when charging is finished.

Memo :

- USB charging is not possible while the AC adapter is connected to the camcorder.
- Do not turn off or set the computer to sleep mode during charging (the charging will stop).
- With some types of computers, charging is possible even when the computer is turned off. Refer to the instruction manual of the computer or consult its manufacturer.
- Charging is also possible with an optional USB AC adapter (AC-V10L). If you use any other USB AC adapters besides JVC AC adapters, safety and performance cannot be guaranteed.
- If charging does not start, detach the battery pack and try again from step 1.
- You cannot record or play back videos while the camcorder is connected to a computer. Disconnect the USB cable after charging.

Approximate Battery Charging Time (Using USB Cable)

Battery Pack	Charging Time
BN-VG107E (Supplied)	9 h 30 m
BN-VG114E	18 h 30 m
BN-VG121E	25 h
BN-VG138E	45 h 30 m